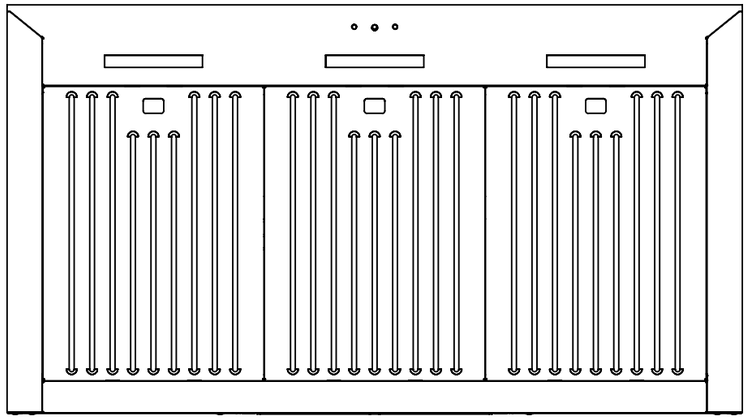

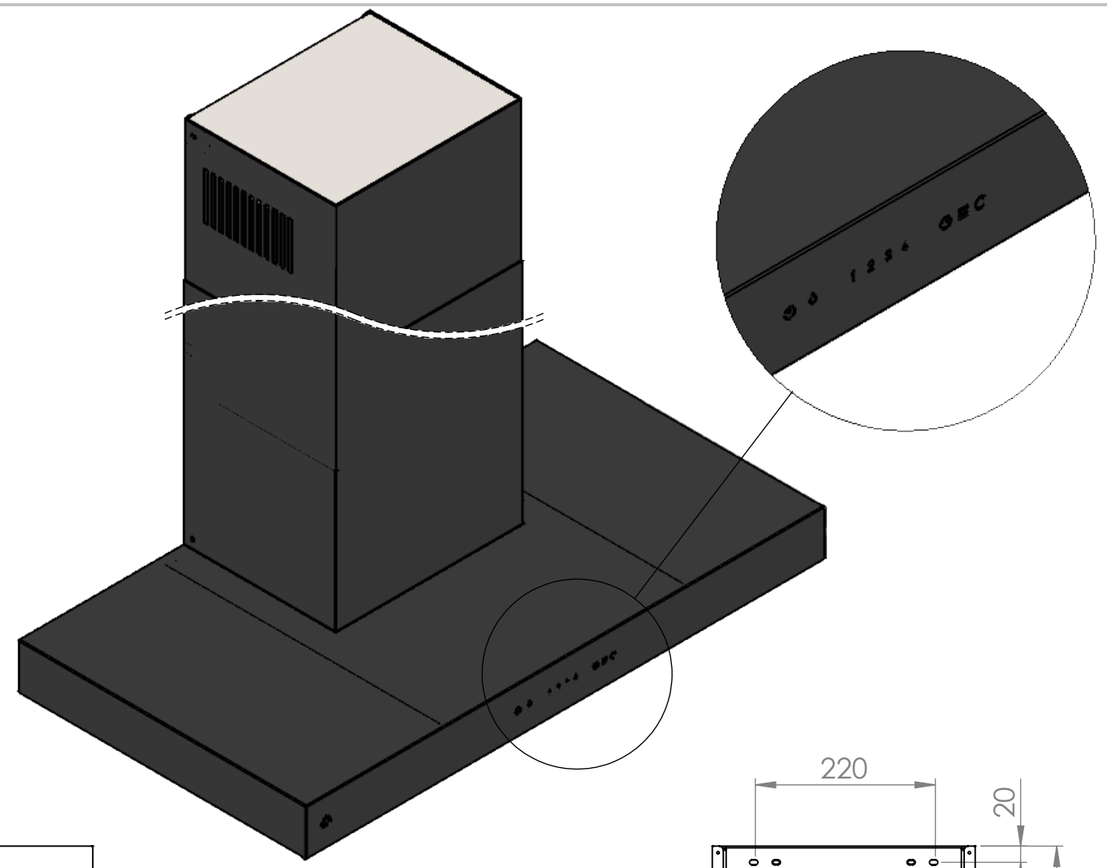

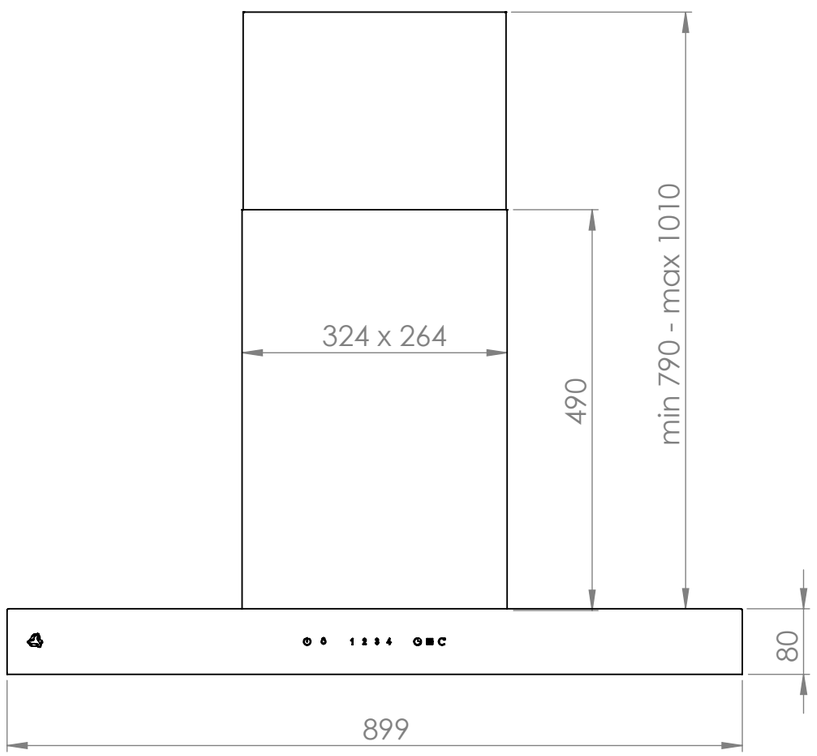

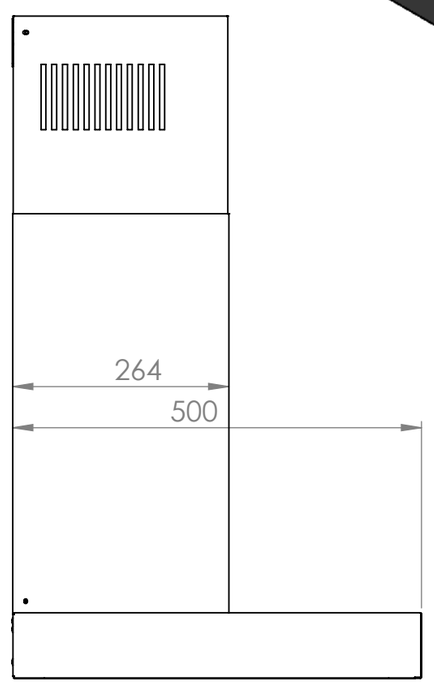

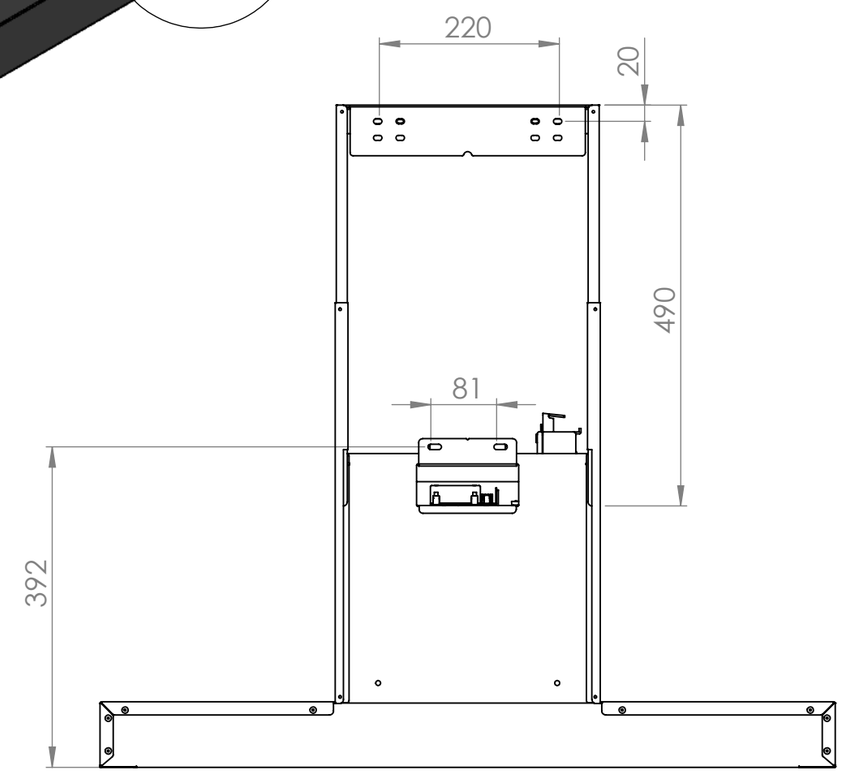

CIARKO® DESIGN